WERLATONE | SINCE 1965

Werlatone, Inc.
17 Jon Barrett Road
Patterson, New York 12563
T 845.278.2220
F 845.278.3440
www.werlatone.com

50 dB Dual Directional Coupler

Model C6766

Frequency:	100-500 MHz
Power:	3000 W CW
Coupling:	50 dB ± 1.0 dB Nom.
Insertion Loss:	0.20 dB Max.
VSWR:	1.20:1 Max.
Flatness:	+/- 0.3 dB Max.
Directivity:	25 dB Min.

*Mismatch Tolerant® Design

- All specifications guaranteed.
- Test data provided with each unit shipped.
- Uni-Directional version available.

* Designed to operate, at 1500 W CW, into an infinite VSWR.

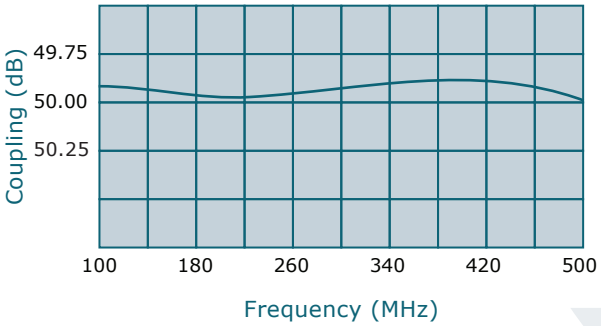

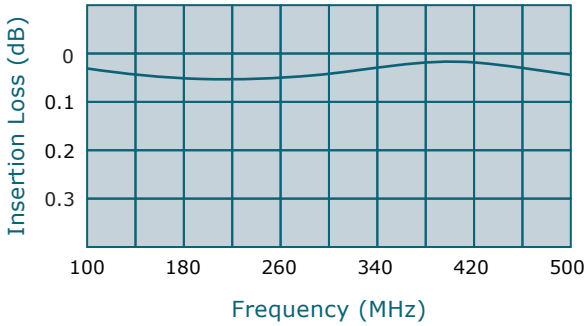

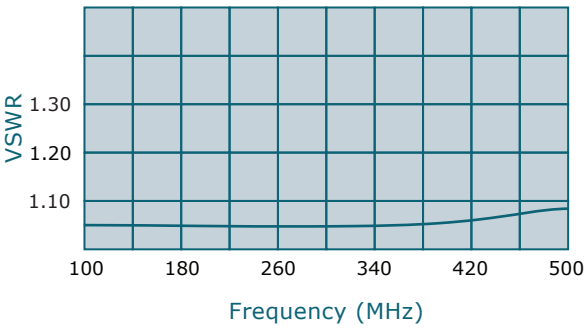

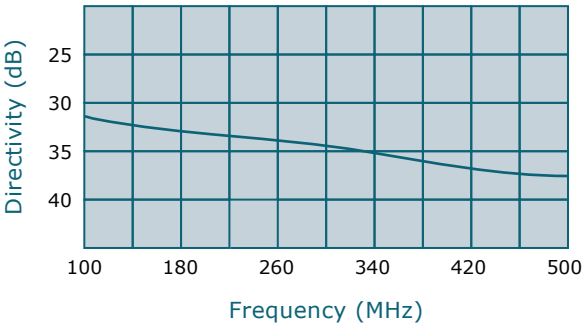

Connector Configurations		
Model	J1,J2 (Mainline)	J3,J4 (Coupled Port)
C6766-20*	7/16 Female	N Female
C6766-23*	7/16 Female	BNC
C6766-41	SC Female	N Female
C6766-43	SC Female	SMA

*Case height increases from 1.09" to 1.59" to support larger connector flange.

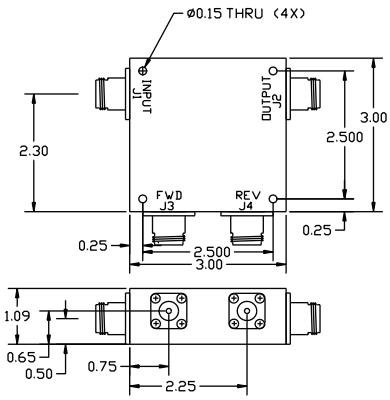

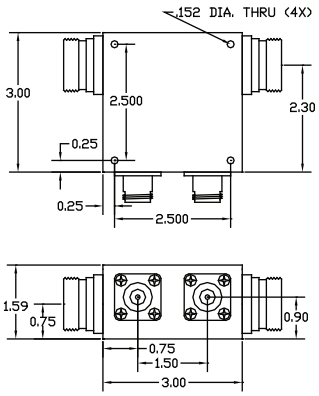

high power RF devices

**Subject to change without notice