WERLATONE

Model QH8362

PRODUCT DATA SHEET **QH8362**

Our patented 3 dB 90° Hybrid Couplers provide:

- Superior component performance starting at 3:1 Bandwidth.
- Thicker center boards for high power and increased repeatability.
- Bonded structures which eliminate any air gaps between substrates.
- More sections per bandwidth for better coupling flatness.
- Electrically shorter and physically smaller RF components.

Features:

High Power | Wide Bandwidths | Small Size | Connectorized | Drop-In & Surface Mount

Electrical Specifications:

Frequency:	800 - 4200 MHz
Power:	150 W CW
Insertion Loss:	0.55 dB Max.
VSWR:	1.35:1 Max.
Phase Balance:	90° ± 5° Max.
Amplitude Balance:	± 0.5 dB Max.
Isolation:	18 dB Min.

Mechanical Specifications:

Type:	Connectorized
Material:	Aluminum 6061-T6
Surface Finish:	Chem. Film Per MIL-DTL-5541F Type I Class 3 (Yellow Iridite) RoHS Compliant Available
Operating Temperature:	-55°C to +75°C
Storage Temperature:	-60°C to +85°C
Weight:	2 oz.
Size:	1.55 x 1.58 x 0.47''

Connector Configurations:

Model	**Sum Port (J1)**	**-90°,0° (J2,J3)**	**Diff. Port (J4)**
QH8362-102	SMA	SMA	SMA

Werlatone's breakthrough technology allows us to build our existing line of Broadband 3 dB High Power 90° Hybrid Couplers. Connectorized 3 dB 90° Hybrid Coupler models are available with a choice of connectors. Several of our existing High Power 3 dB 90° RF Couplers are three port designs, wherein the difference port is internally terminated with a high power termination. This eliminates the need for a customer supplied external load for each Hybrid Coupler.

Restriction on use, duplication, or disclosure of proprietary information. This document contains proprietary information which is the sole property of Werlatone, Inc.

Werlatone, Inc. 17 Jon Barrett Road Patterson, NY 12563 T:(845)278-2220 F:(845)278-3440 sales@werlatone.com www.werlatone.com

Model QH8362

Performance Data (Specifications subject to change without notice):

Coupling:

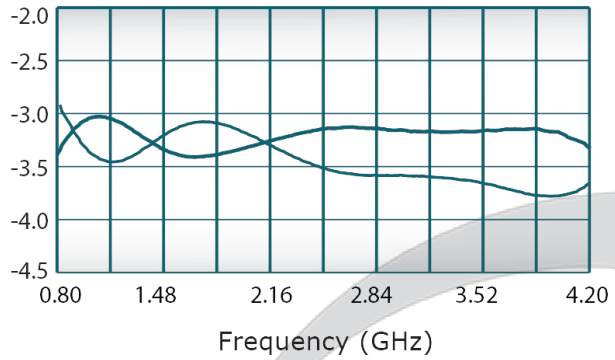

VSWR:

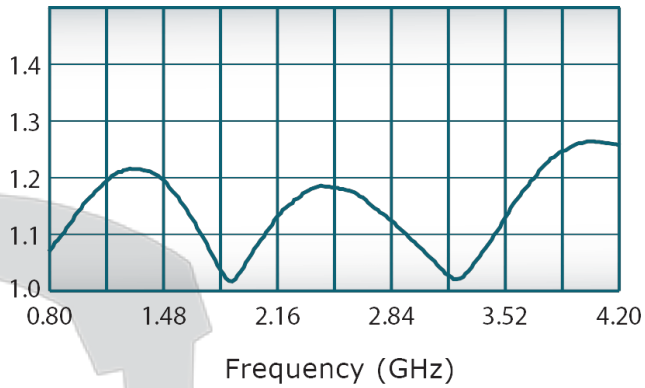

Isolation:

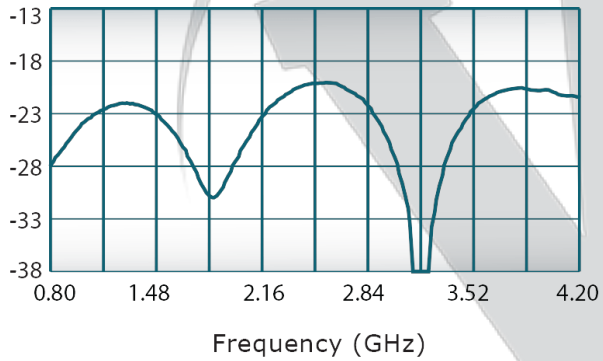

Phase Balance:

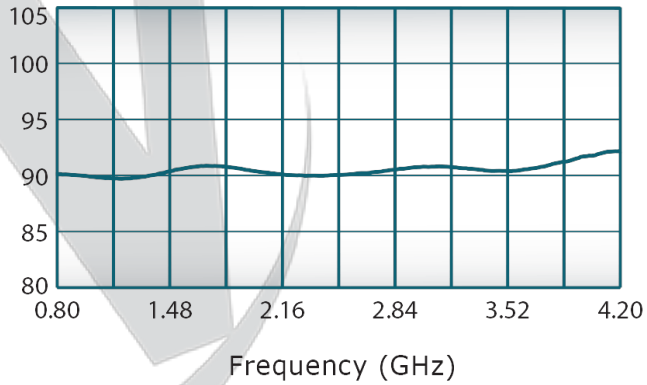

Restriction on use, duplication, or disclosure of proprietary information. This document contains proprietary information which is the sole property of Werlatone, Inc.

Werlatone, Inc. 17 Jon Barrett Road Patterson, NY 12563 T:(845)278-2220 F:(845)278-3440 sales@werlatone.com www.werlatone.com

RESTRICTION ON USE, DUPLICATION OR
DISCLOUSRE OF PROPRIETARY INFORMATION
This document contains proprietary information
which is the sole property of Werlatone, Inc.

REVISION HISTORY

DATE	REV	DESCRIPTION	AUTHOR	CHECKED BY
4/9/2009	-	INITIAL RELEASE	GP	NH
6/6/2013	A	ECN 8214	GP	BW

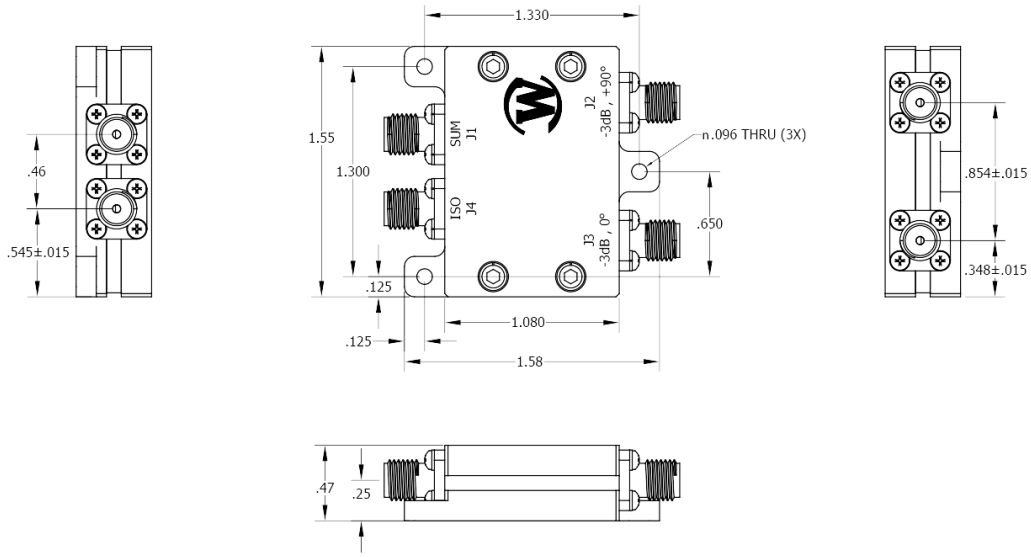

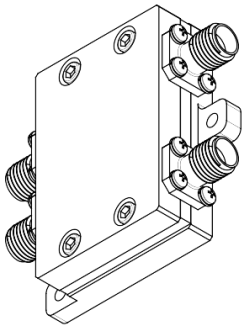

NEXT ASSY	USED ON
APPLICATION	

UNLESS OTHERWISE SPECIFIED
- INTERPRET DRAWING IAW MIL-STD-100
- DIMENSIONING PER ASME Y14.5M-2009
- PARENTHETICAL INFO FOR REF ONLY
- DIMENSIONS ARE IN INCHES
- DIMENSIONAL LIMITS APPLY BEFORE PROCESSES
- TOLERANCES: ANGLE ± 2°
  3 PL ± .005
  2 PL ± .015

THIRD ANGLE PROJECTION

DWN	GP	DATE	4/8/09
CHK	CS	DATE	4/9/09
ENGR	GP	DATE	4/9/09
APVD	BW	DATE	4/9/09
QA		DATE	
RLSE		DATE	

WERLATONE | SINCE 1965
17 Jon Barrett Rd
Patterson, NY 12563

TITLE
3dB, 90° Hybrid Coupler

SIZE	CAGE CODE	DWG NO	REV
A	28812	20510-500	A

SCALE 1:1 SHEET 1 OF 1

Restriction on use, duplication, or disclosure of proprietary information. This document contains proprietary information which is the sole property of Werlatone, Inc.
Werlatone, Inc. 17 Jon Barrett Road Patterson, NY 12563 T:(845)278-2220 F:(845)278-3440 sales@werlatone.com www.werlatone.com