WERLATONE

Model C10018

PRODUCT DATA SHEET **C10018**

4-Port Dual Directional Coupler employs two, 3-Port Uni-Directional Couplers, internally connected, in tandem, providing measurement of both forward and reverse power. Ideal for simultaneously monitoring a system's forward and reverse power and for reflectometer measurements. Unlike the Bi-Directional Coupler, the directivity of the Dual Directional Coupler is unaffected by the loads on the coupled ports.

Features:

High Power | Wide Bandwidths | Small Size | Flat Coupling | Custom Designs Available

Electrical Specifications:

Frequency:	50 - 500 MHz
Power:	3000 W CW
Coupling:	50 ± 1.0 dB Max.
Insertion Loss:	0.1 dB Max.
Flatness:	± 0.5 dB Max.
VSWR (ML):	1.15:1 Max.
Directivity:	25 dB Min.

Mechanical Specifications:

Type:	Connectorized
Material:	Aluminum 6061-T6
Surface Finish:	Chem. Film Per MIL-DTL-5541F Type I Class 3 (Yellow Iridite) RoHS Compliant Available
Operating Temperature:	-55°C to +75°C
Storage Temperature:	-60°C to +85°C
Humidity:	95% Non-Condensing
Size:	3.0 x 3.0 x 1.59"

Connector Configurations:

Model	**Input (J1)**	**Output (J2)**	**Fwd (J3)**	**Rev (J4)**
C10018-20	7/16 Female	7/16 Female	N Female	N Female
C10018-22	7/16 Female	7/16 Female	SMA	SMA
C10018-23	7/16 Female	7/16 Female	BNC	BNC

Werlatone® Broadband Dual, Uni, and Bi Directional RF Couplers are designed to tolerate the most stringent operating conditions associated with military and EMC testing environments. Many of our RF Directional Couplers, designated Mismatch Tolerant®, will operate continuously, at rated power, into a severe load mismatch condition. Our multi-octave Directional Couplers maintain exceptional coupling flatness, directivity, VSWR, and insertion loss.

Restriction on use, duplication, or disclosure of proprietary information. This document contains proprietary information which is the sole property of Werlatone, Inc.

Werlatone, Inc. 17 Jon Barrett Road Patterson, NY 12563 T:(845)278-2220 F:(845)278-3440 sales@werlatone.com www.werlatone.com

WERLATONE

Model C10018

Performance Data (Specifications subject to change without notice):

Coupling:

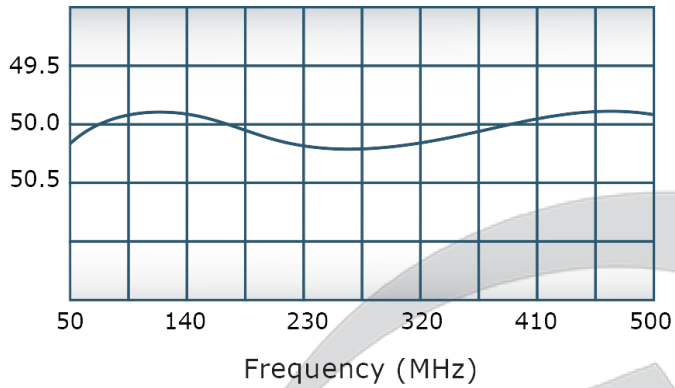

VSWR:

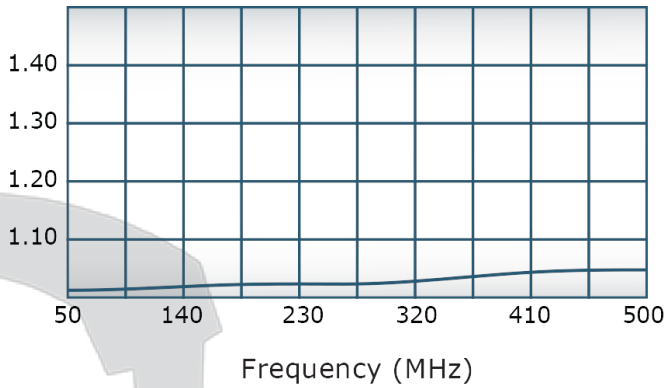

Insertion Loss:

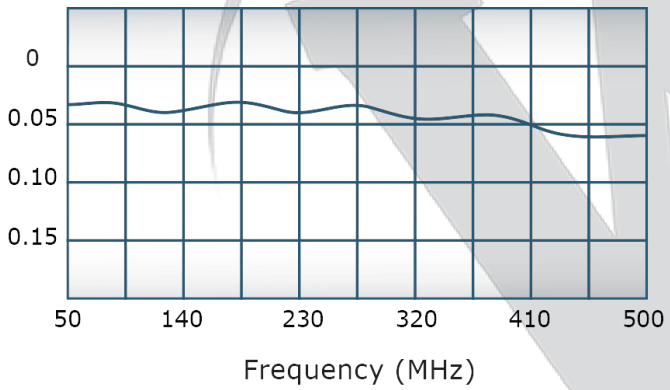

Directivity:

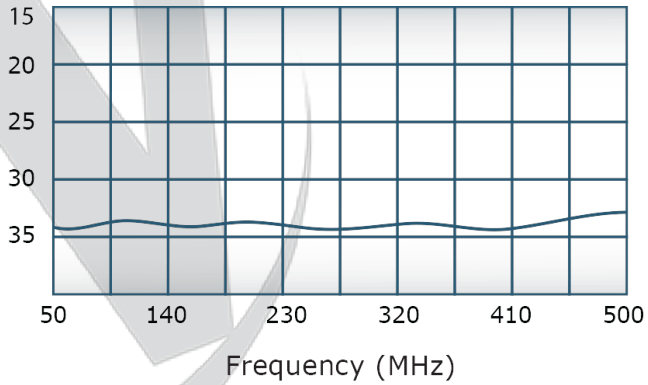

Restriction on use, duplication, or disclosure of proprietary information. This document contains proprietary information which is the sole property of Werlatone, Inc.

Werlatone, Inc. 17 Jon Barrett Road Patterson, NY 12563 T:(845)278-2220 F:(845)278-3440 sales@werlatone.com www.werlatone.com

RESTRICTION ON USE, DUPLICATION OR
DISCLOSURE OF PROPRIETARY INFORMATION
This document contains proprietary information
which is the sole property of Werlatone, Inc.

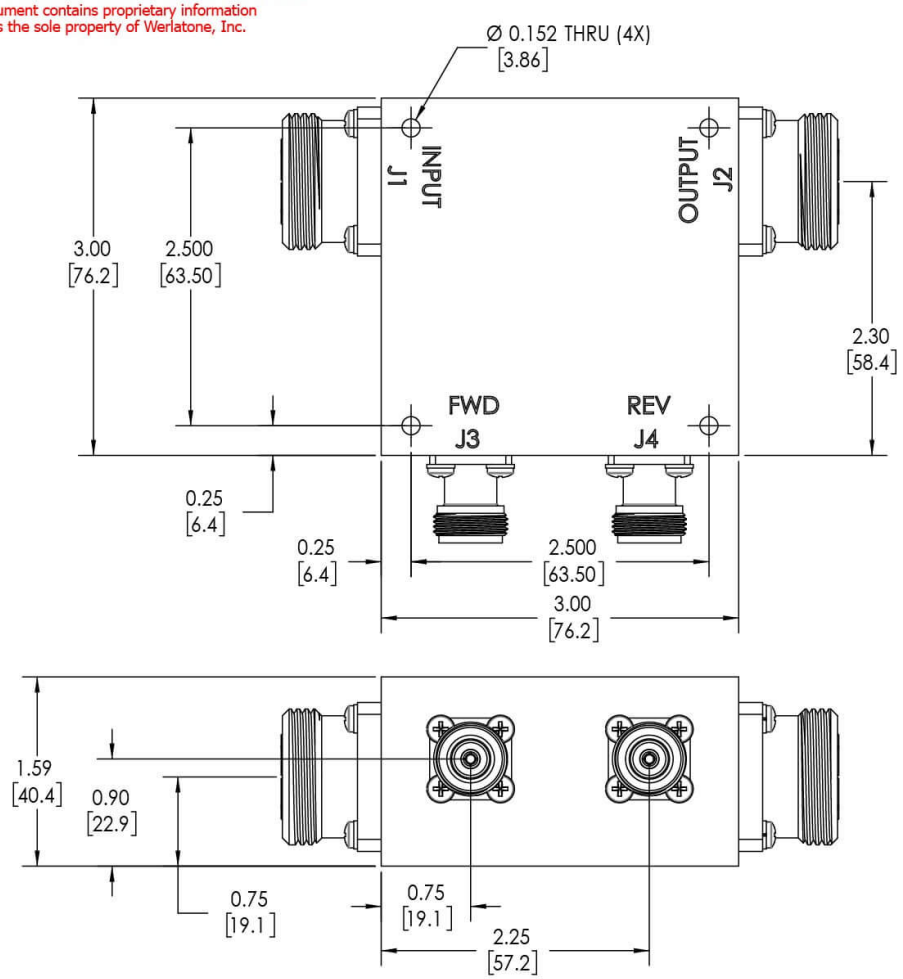

REVISION HISTORY			
REV.	REVISION RECORD	DATE	APPROVED
A	ECN 9696	5/13/2019	RB

NOTES: UNLESS OTHERWISE SPECIFIED

1. **MATERIAL: ALUMINUM 6061-T6**
2. **FINISH: CHEM FILM PER MIL-DTL-5541F CLASS I TYPE 3 (YELLOW IRIDITE)**
3. **CONNECTORS:**
   J1, J2: 7/16 FEMALE
   J3, J4: N FEMALE

NEXT ASSY	USED ON
APPLICATION	

UNLESS OTHERWISE SPECIFIED
- INTERPRET DRAWING IAW MIL-STD-100
- DIMENSIONING PER ASME Y14.5M-2009
- PARENTHETICAL INFO FOR REF ONLY
- DIMENSIONS ARE IN INCHES
- DIMENSIONAL LIMITS APPLY BEFORE PROCESSES
- TOLERANCES:
  ANGLES ± 2°
  3 PL ± .005 [.13]
  2 PL ± .015 [.38]
- REMOVE ALL BURRS AND SHARP EDGES R.01 MAX
- CONCENTRICITY MACHINED DIA: .002 FIM
- MACHINE TOOL MISMATCH .003 MAX

THIRD ANGLE PROJECTION

		DATE
DWN	SD	5/13/2019
CHK	CS	5/13/2019
ENGR		
MFGR		
QA		
RLSE		

WERLATONE| SINCE 1965
17 Jon Barrett Rd
Patterson, NY 12563

TITLE
OUTLINE

SIZE	CAGE CODE	DWG NO	REV
B		10443-501	A

SCALE 1:1 SHEET 1 OF 1

Restriction on use, duplication, or disclosure of proprietary information. This document contains proprietary information which is the sole property of Werlatone, Inc.
Werlatone, Inc. 17 Jon Barrett Road Patterson, NY 12563 T:(845)278-2220 F:(845)278-3440 sales@werlatone.com www.werlatone.com